COBRA® 23801 E. La Palma Ave., Yorba Linda, Ca 92887 Ph. 714.692.8180, Fax. 714.692.5016

www.cobrausa.com

Items Supplied >

1 – INTAKE COVER W/ SCREEN / RING ASSEMBLY
1 – K&N® VENTURI AIR FILTER
1 – BILLET VELOCITY STACK
1 – MOUNTING PLATE
1 – RUBBER INTAKE BOOT
1 – SUPPORT BRACKET
2 – BOLT, 1/4”-20 X 1/2”, BUTTONHEAD W/ LOCK PATCH
3 – BOLT, 1/4"-20 X 5/8”, BUTTONHEAD W/ LOCK PATCH
2 – BOLT, M6 X 20mm, BUTTONHEAD
2 – LOCK WASHER, 1/4” TOOTHED
2 – SPACER, ALUMINUM

Application(s) >

HONDA PHANTOM 750	2010 – 2019
HONDA AERO 750	2011 – 2016
HONDA SPIRIT 750	2012 – 2014

Instruction Manual >

06-0119-01B / 02B / 03B / 04B

Read all instructions carefully and completely before installing your new POWRFLO™ Intake.

1. Remove the seat. Remove the hex bolt at the rear of the fuel tank. Prop the rear of the fuel tank up 2 - 3 inches with a block of wood to allow access to intake. Do **NOT** remove gas lines and be careful not to scratch or drop tank, assistance may be needed.
2. Remove the (2) bolts that secure the stock air cleaner to the cylinder heads; these bolts and the bushings will not be reused.
3. On the backside of the air cleaner detach the two rubber hoses by squeezing the hose clamps with a pair of pliers and sliding them past the hose inlets.
4. Loosen the throttle body hose clamp on the backside of the air cleaner. Have an assistant pull the front of the fuel tank off the front mounts and raise up just enough to allow intake snorkel clearance to be removed. Remove the air cleaner by pulling the rubber boot off the throttle body. Carefully rotate the air cleaner outwards from the bottom to disengage the intake snorkel that resides under the fuel tank. Reinstall fuel tank on front mounts, but leave propped up at rear.
5. Using the (2) supplied 1/4"-20 X 5/8” buttonhead bolts and lock washers, assemble the velocity stack, mounting plate and rubber intake boot in the order shown in Figure 1. NOTE: The rubber boot lip needs to be sandwiched between the velocity stack and the mounting plate.
6. Remove the throttle body hose clamp from stock boot and slide it onto the supplied rubber intake boot; position it as shown in Figure 1.

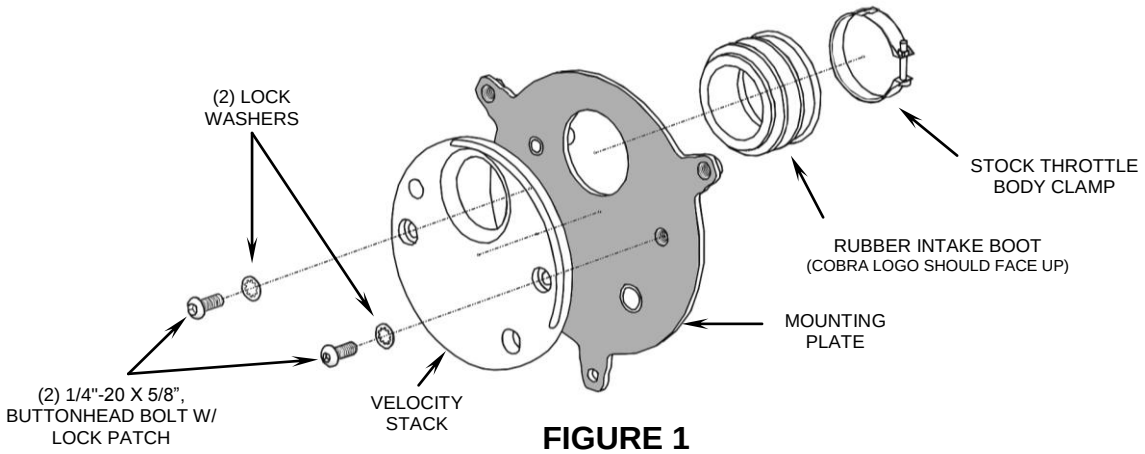

FIGURE 1

** Cobra® recommends you always wear a helmet while riding. Please never operate your motorcycle while under the influence of alcohol and/or drugs. Enjoy the new look of your motorcycle and please ride safely.*

7. Align the holes in the support bracket with threaded holes in the cylinder heads, then insert the (2) supplied M6 x 20mm buttonhead bolts through the support bracket, supplied spacers and into the cylinder heads, lightly snug the bolts. See Figure 2 for orientation.
8. The mounting plate assembly is ready to be attached to the motorcycle. Attach the hoses and hose clamps that were disconnected in Step 3, to the inlet tubes on the mounting plate. Install the rubber boot over the throttle body but leave the clamp loose for now, be sure the lower hole aligns with the center threaded hole in the support bracket, see Figure 2.
9. Place the supplied K&N® filter onto the velocity stack. Insert the round intake screen into the chrome ring so the screen sits inside the edge of the black ring. Place the ring and screen between the legs of the naked black intake cover as shown in Figure 3.
10. Place the naked intake cover, ring and screen assembled in Step 9, over the air filter and align each leg to the mounting plate holes. Be sure screen sits at a 45 ° angle to the bottom leg, and C/V logo'd leg is at the upper left position. Insert (1) supplied 1/4"-20 x 5/8" buttonhead bolt through the lower leg of the intake cover into the base mounting plate and into the support bracket threads, see Figure 3. Insert the remaining (2) 1/4"-20 x 1/2" buttonhead bolts through the upper legs of the intake cover and into the base mounting plate. Lightly snug to hold all parts in place.
11. Align and level the mounting plate assembly so the air cleaner will sit straight, then fully tighten the clamp over the throttle body, then the bolts that secures the cover, mounting plate and support bracket, followed by the M6 bolts in the cylinders.
12. Lower the fuel tank back into place and secure with original bolt and washer, install seat and secure properly.

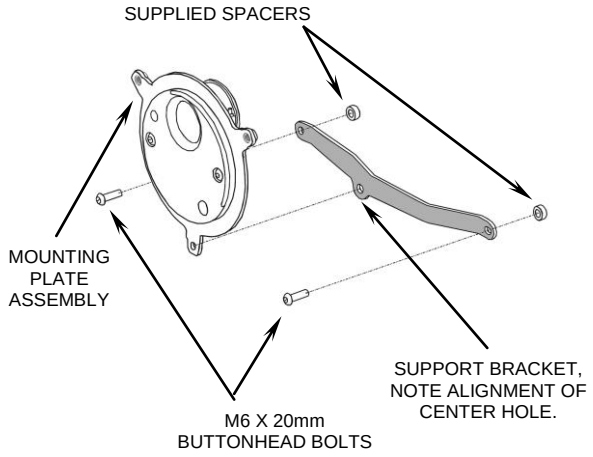

FIGURE 2

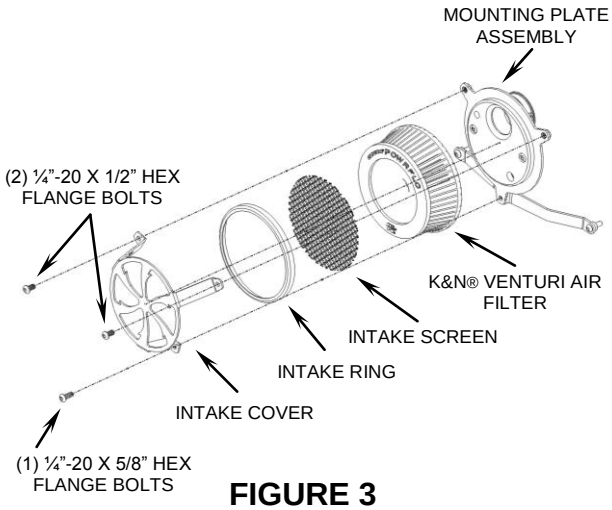

FIGURE 3

CLEANING INSTRUCTIONS:

To clean your black air intake system use a liquid based soap detergent, such as dishwashing soap applied with a soft cloth and rinse with clean water. Note: Avoid abrasive cleaning methods such as granular or dry cleansers, simple green, Scotch-Brite or steel wool pads. Abrasives may breach the coating and shorten life.

CALIFORNIA CUSTOMERS:

In California, aftermarket parts that have been identified specifically as replacement parts or that have received an Air Resources Board Executive Order may be used on street motorcycles. All other emissions related aftermarket parts are for competition use only. A list of replacement parts and EO parts, and corresponding fitment is provided at: www.cobrausa.com